IF15 SET-UP SHEET

NAME	TEEMU LEINO
DATE	23.10.2018
TRACK	HOMESTEAD RC RACEWAY
EVENT	1/10 SEDAN WORLD CHAMPIONSHIP

PINION		TRANSMISSION	SPUR		
☑ 16T	☐ 17T	1ST	☐ 58T	☑ 59T	☐ 60T
☑ 21T	☐ 22T	2ND	☑ 53T	☐ 54T	☐ 55T

SIDE PULLY	
☑ 25T	☐ 26T

FRONT	SHOCKS	REAR
KIT	SPRINGS	13,8
500	OIL	550
☐ STD ☐ OPTION	O RING	☐ STD ☐ OPTION
☐ STD HOLES mm	PISTONS	☐ STD HOLES mm

FRONT	DIFF OIL	REAR
1.000.000		80.000

FRONT	ANTI-ROLL BAR	REAR
2 mm		1,9 mm

FRONT	RIDE HEIGHT	REAR
6,2` mm		7 mm

FRONT	WIDTH	REAR
199 mm		199,9 mm

CONTROLLED	TIRES	BRAND
☑ YES ☐ NO		MATRIX

FRONT			REAR	
LEFT	RIGHT		LEFT	RIGHT
mm	mm	DIAMETER	mm	mm

FRONT	WHEEL PLATE	REAR
☐ YES ☑ NO		☐ YES ☑ NO

BODY

BODY SETTING

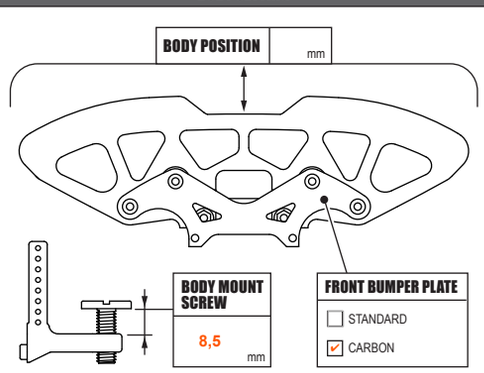

FRONT

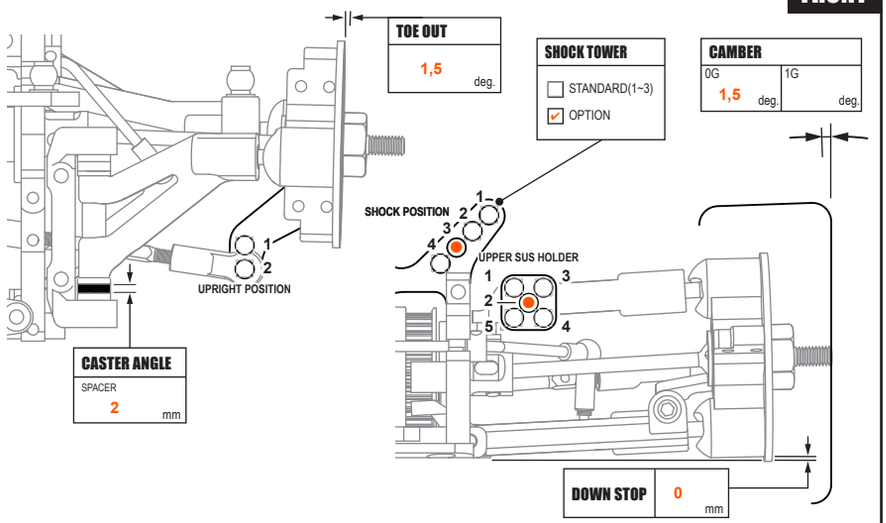

REAR

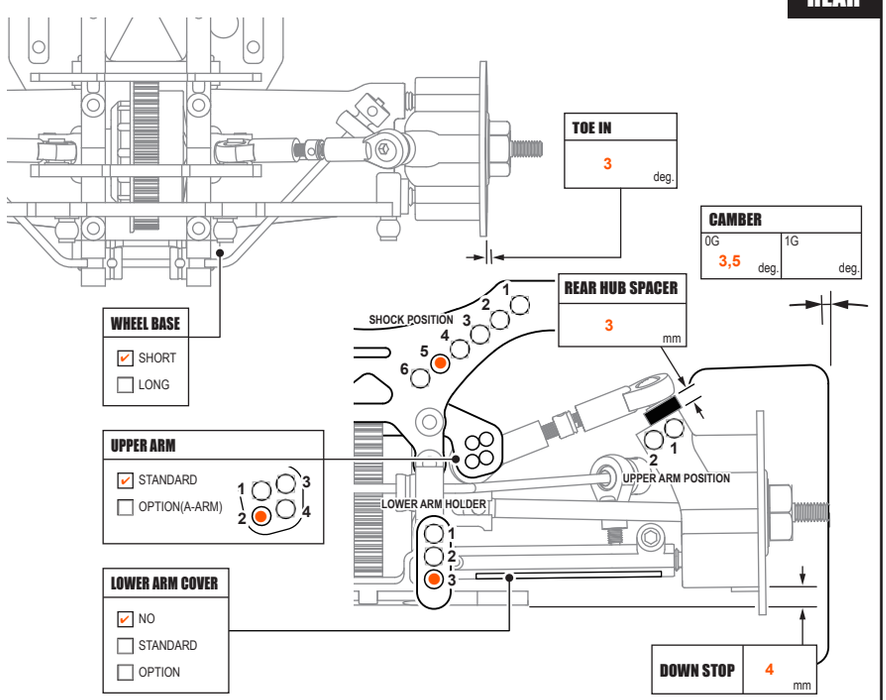

CHASSIS

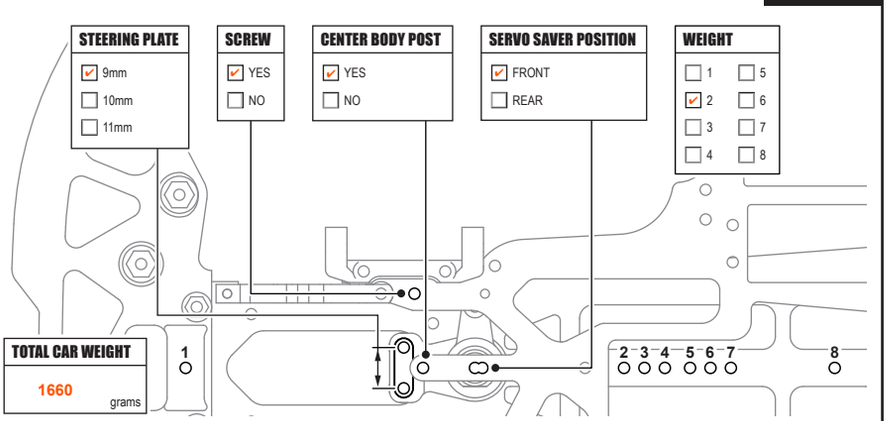

COMMENTS

INFINITY