IF15 SET-UP SHEET

NAME	NAOTO MATSUKURA
DATE	27.10.2018
TRACK	HOMESTEAD RC RACEWAY
EVENT	1/10 SEDAN WORLD CHAMPIONSHIP

PINION		TRANSMISSION	SPUR		
☐ 16T	☑ 17T	1ST	☐ 58T	☐ 59T	☑ 60T
☐ 21T	☑ 22T	2ND	☐ 53T	☐ 54T	☑ 55T

SIDE PULLY	
☑ 25T	☐ 26T

FRONT		SHOCKS	REAR	
KIT		SPRINGS	KIT+1 (H)	
550		OIL	550	
☑ STD	☐ OPTION	O RING	☑ STD	☐ OPTION
☑ STD	HOLES mm	PISTONS	☑ STD	HOLES mm

FRONT	DIFF OIL	REAR
1.500.000		100.000

FRONT	ANTI-ROLL BAR	REAR
2,2 mm		2,1 mm

FRONT	RIDE HEIGHT	REAR
6,5 mm		8 mm

FRONT	WIDTH	REAR
198,5 mm		199,5 mm

CONTROLLED	TIRES	BRAND
☑ YES ☐ NO		MATRIX

FRONT			REAR	
LEFT	RIGHT		LEFT	RIGHT
mm	mm	DIAMETER	mm	mm

FRONT	WHEEL PLATE	REAR
☐ YES ☑ NO		☐ YES ☑ NO

BODY
PF P47

BODY SETTING

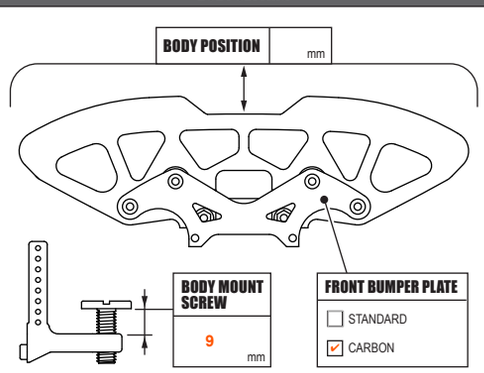

FRONT

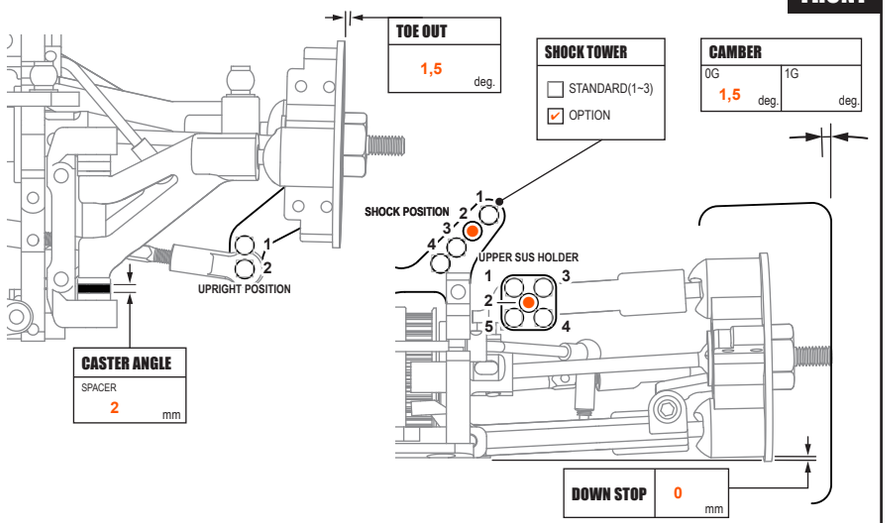

REAR

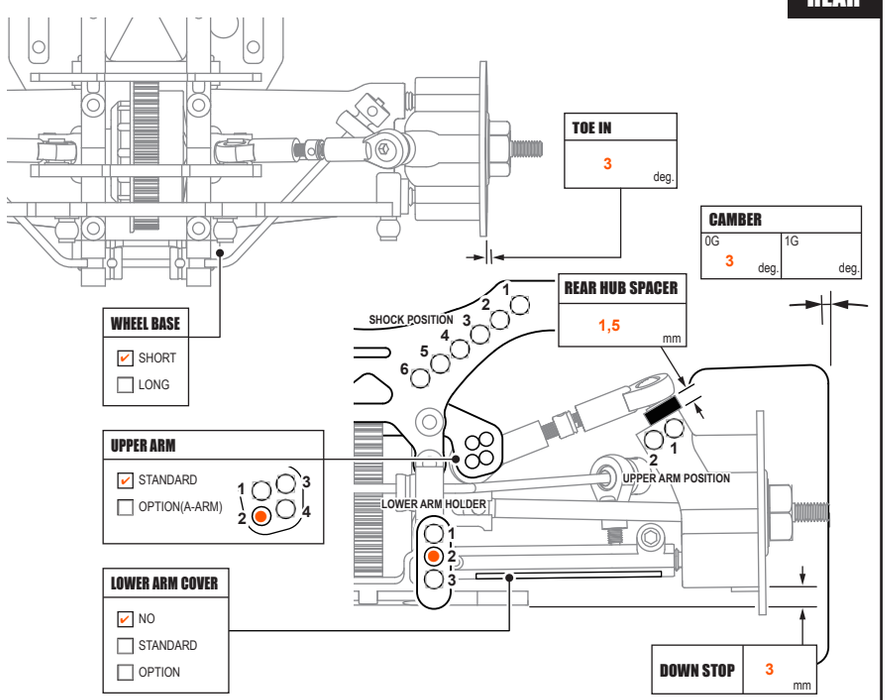

CHASSIS

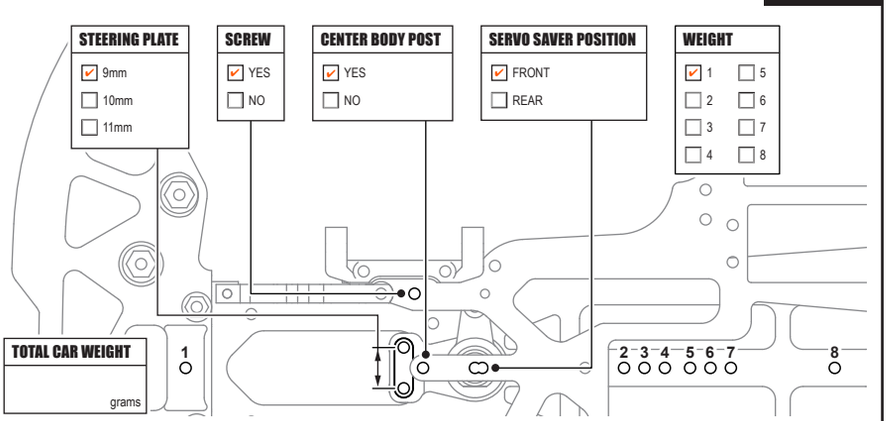

COMMENTS

WEIGHT POSITION: 1+8

INFINITY